MOTOLINE

PI500 VECTOR CONTROL INVERTERS

Product Overview

BEE4
EMPOWERING SUPPLIER

ISO 9001	Certified
ISO 14001	Certified
ISO 45001	Certified

ABOUT US

Established in 1974 as a single bearing shop in Durban, South Africa; BMG's aggressive growth strategy has included acquisitions, supplemented by a steady organic growth discipline. BMG attracts best-of-breed talent resulting in technical expertise that differentiates BMG in the industry. Staff are truly part of the BMG family and its success.

BMG boasts an accredited in-house technical and commercial training academy which fosters a culture of staff development and career advancement; it's all about sustainability.

The net result, is a company that reliably supplies and supports 70 000 customers in 15 countries with the widest range of industrial engineered products and expert services in Africa via 105 branches.

BMG is positioned to deliver bespoke 360 degree solutions to its customers, and subsequently return on investment to its investors and shareholders. BMG plays a pivotal role in supporting the productivity and production targets of all Industrial, Manufacturing, Mining and Agricultural sectors of the economies in the countries it serves. With an enviable reputation as Africa's largest distributor, manufacturer and service provider of the highest quality engineering consumables and components; including

- Bearings & Seals
- Power Transmission Components
- Drives, Motors and Controllers
- Hydraulics, Pneumatics and Filtration
- Heavy and Light Duty Materials Handling
- Valves and Lubrication
- Fasteners, Gaskets and Tools

BMG is a level 4 BEE contributor with ISO 9001 Quality Assurance certification. Health and safety of its employees and customers is a paramount focus and the company adheres to ISO 45001. BMG is also committed to environmental care and sustainability and strictly follows the ISO 14001 charter.

As a key contributor to the Invicta Holdings stable, BMG has played a major part in Invicta's unique achievement of being rated in South Africa's Top 100 Companies for 21 consecutive years.

TABLE OF CONTENTS

INDEX

INTRODUCTION

BMG DRIVES STAND BY YOU 24/7

The latest addition to BMG's large array of leading brands is the BMG Motoline inverter range. Reliable & efficient automation systems from BMG have increased companies productivity by saving energy & improving productivity. At the heart of these achievements is the BMG Motoline PI500 inverter.

BMG Electronics division has technical expertise that equates to over 30 years experience with the BMG product range.

FREQUENCY INVERTER CONTROL FOR ENERGY EFFICIENCY

BMG joins a global trend & leads the way in South Africa with a range of products & services for responsible energy consumption.

Frequency converters produce an optimised supply to drive the electric motor, allowing the motor to operate under conditions that simulate a full load response. Since the efficiency of an electric motor peaks at its full load rating, the motor is "tricked" into functioning at peak efficiency. Additionally, high starting currents are drawn by directly connected mains-fed motors when starting high inertia loads such as compressors. Motors operating under these conditions experience high internal mechanical stresses that reduce service life. By using the ramp acceleration feature of the inverter, this dynamically controls the gradual acceleration of the load & results in saving power.

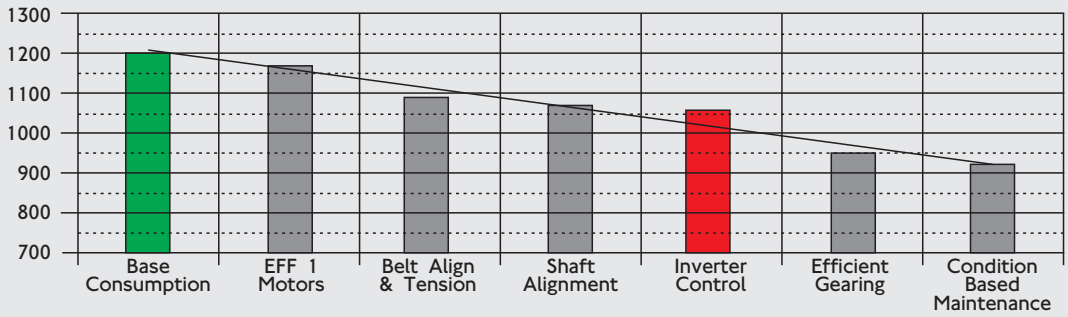

Technical Expertise & Service

Customers in every industry are faced with increased demands for optimized productivity, cost containment & profitability.

Harness BMG's technical expertise for reliable & cost effective solutions. Our team is at your service from concept & design through to diagnosis & control for preventative maintenance of critical automation functions.

PART OF EVERY PROCESS - We aim to give our customers total satisfaction through the quality of our products, service & commitment to the development of your business.

Commissioning & Installation

Our qualified team is able to assist you with telephonic or on-site commissioning as well as installation of your equipment.

Repair Facility

Limit your machine downtime through the availability of our stock & national footprint. BMG can supply a full range of certified spare parts compatible with your equipment with fast turn around times. Repair work can be done on-site or at our central workshop facility.

Maintenance Contracts

The reliability & long term performance of your facilities is a top priority. BMG offers maintenance contracts giving you priority access to our group of experts with the latest software for on-site assistance. This will enable you to anticipate technical risks; plan for maintenance to avoid detrimental production shutdowns & control of your maintenance costs.

Training

Let our technical experts provide you with training solutions tailored to your requirements. A range of training options are available - standard or personalised courses - at your premises or in our training facilities.

Technical Helpline

BMG is committed to 24/7/365 day service. In case of breakdown or emergency a technical expert is just a phone call away.

Contact Numbers:

+27 11 620 1534 / +27 11 620 1539
24 Hr Standby No: +27 71 298 3330

TECHNICAL FEATURES

SUPERIOR PERFORMANCE IN MOTOR DRIVE

Advanced motor drive technology

The PI500 series inverter is compatible to a variety of standard motor technologies which include synchronous, asynchronous and permanent magnet motors. PI500 inverters are able to control most manufacturer's motors and are designed to adapt to each motor characteristic through an electronic "Auto Tuning Process" function. High performance current vector control can be achieved in open loop (sensorless) or through the integration of closed loop (eg: Shaft encoder) hence increasing accuracy and control within a broader range of speeds.

Automatic motor tuning

The PI500 provides improved motor and load control through a comprehensive automatic self-learning process. The PI500 inverter injects DC pulses through the three phase motor windings which creates valuable feedback on the specific motor characteristics. A rotating learning process provides the inverter with extensive data regarding the motor and load. Motor and loads that cannot be rotated due to process limitations are accommodated by the static motor's tuning capability which proved the inverter with motor data only. Static motor adaption creates a convenient option for installation because the motor does not require decoupling.

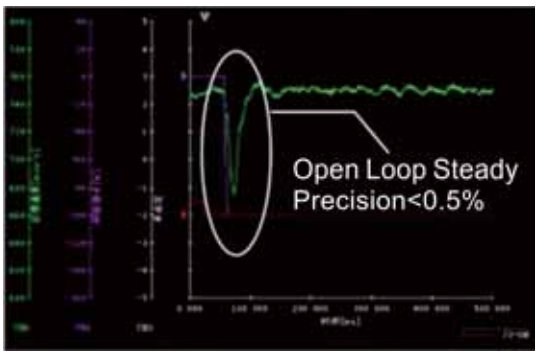

Wide range of precise & stable speed control

The PI500 inverter is capable of open loop vector control speed precision within a 0.5% tolerance and a speed control range of 1:100. In closed loop, the PI500 inverter's performance exceeds most users' expectations with a vector control speed precision tolerance of 0.02% and a speed control range of 1:1000. Open loop torque response times are less than 20ms in open loop and less than 5ms in closed loop assuring high levels of accurate control at all times during motor operation.

Improved torque control at low speeds

Pi500 inverter provides a stable, high torque output at low motor frequencies allowing users to control heavy loads at lower motor speeds. The PI500 inverter is currently able to accurately control motor torque right down to 0,01 Hz. Parameter selection allows easy access to torque mode, providing an effective method of controlling torque output of a motor-driven load.

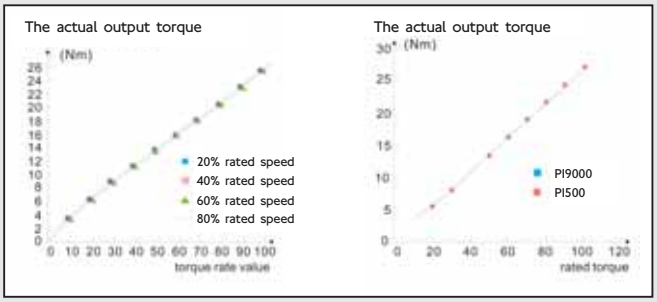

Mains loss ride through function

Unstable power supplies can lead to mild or severe power dips which inadvertently cause major plant downtime and/or loss of raw materials. The PI500 inverter is capable of harnessing regenerative energy from its driven load for short periods of time which aids in maintaining a DC link voltage sufficient for the drive to maintain functionality. The mains loss ride through function therefore assures maximum up time of the inverter during intermittent power supply dipping.

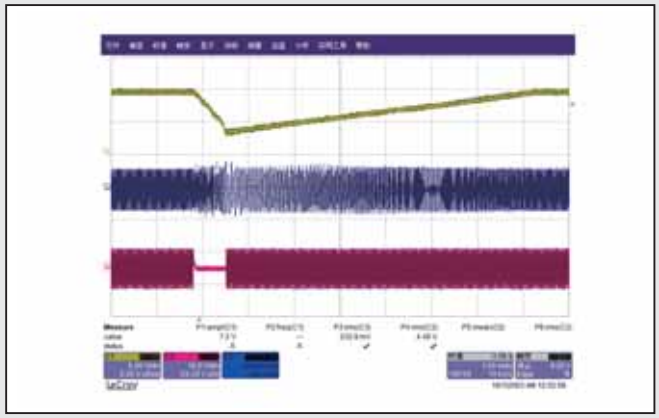

Voltage range

The PI500 now comes with a wide input voltage range compatibility to accommodate various customer power supply requirements. A wider voltage range assures users of stable motor operation during large fluctuations of the transformer output voltage.

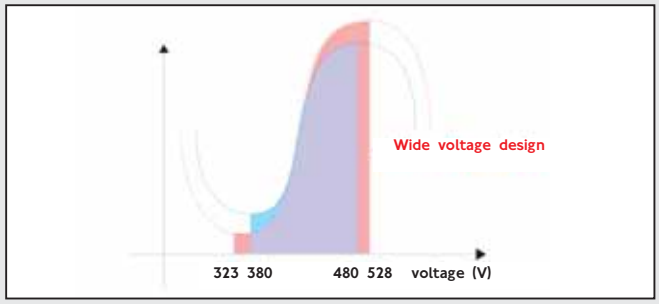

EMC design specifications

The PI500 adopts the latest international standards: IEC/EN61800-3:2004 (Adjustable speed electrical power drive systems part 3: EMC requirements and specific test methods), which assesses the inverter in terms of electromagnetic interference and anti-electronic interference. Electromagnetic interference mainly tests the radiation interference, conduction interference and harmonics interference on the inverter. (necessary for civil inverters). Optional Schaffner EMC filters are available in order to meet C2 EMC requirements.

Certification standards

The PI500 inverter complies with the EMC directive 2004/108/CE Electromagnetic compatibility directive and LVD directive 2006/95EC low voltage directive IEC 61000-2-2:2002, IEC61000-4-2:2008, IEC61800-5-1:2007, etc. All PI500 inverters meet ROHS directive.

Independent airflow channel

In order to improve reliability, the drive's cooling system has been designed to channel the intake of air which may include contaminants such as dust or dirt molecules. The smart airflow system facilitates airflow over the heat-sink and limits airflow over electronic components. Reduced intake of contaminants is key to reducing over heating or short circuiting of electronic components.

TECHNICAL FEATURES

Conformal Coating

Additional protection against contaminants and corrosive gases is provided by a conformal coating applied over the drives' printed circuit boards. A 3D application process ensures that each printed circuit board is sufficiently coated to the desired micron standard. Conformal coating ensures that the inverter's electronics are dust proof, gas proof, moisture proof and oil proof which all reduce the possibility of corrosion of key components and solder points.

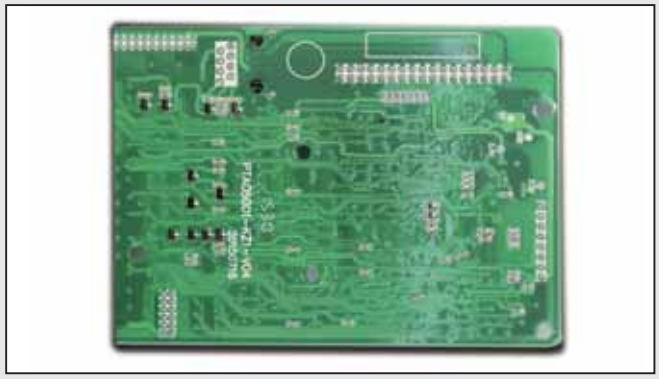

Thermal Model

High precision thermal simulation software has ensured that the PI500 inverters have been designed to effectively operate within various temperature ranges. Each unit is thermally tested ensuring that operation remains stable during temperature variations. The units efficiency is monitored to ensure that heat dissipation remains within the design parameters. All units are thermally modeled at load limit to ensure that thermal models are not exceeded.

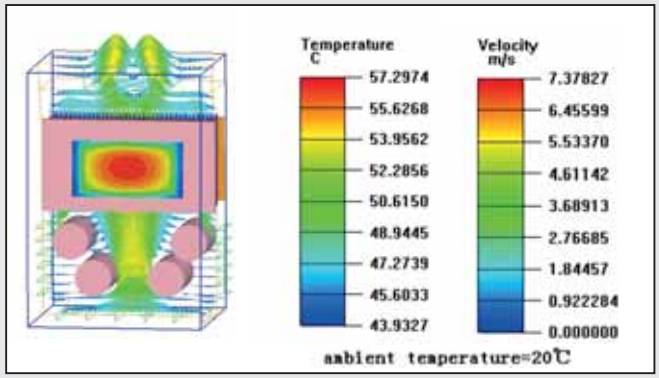

Increased Lifespan

Semi conductor devices are key components in VFD/VSD technology and need to provide reliable operation for many years of service. PI500 inverters are designed with first class components, sourced from reliable suppliers that conform to the highest levels of quality. Semi conductor selection is based on components that have an increased temperature rise which increases the lifespan of the components.

Environmentally Friendly

The PI500 inverter complies with the ROHS directive which ensures that the materials and components utilised in the manufacture and disposal of the PI500 will not damage the environment. The nature of VFD/VSD technology provides users with the ability to save energy. The PI500 adopts the latest energy control technology providing efficient operation of motor and application. Increasing energy saving (>10%) can be realised through the use of the PI500 and synchronous motor technology.

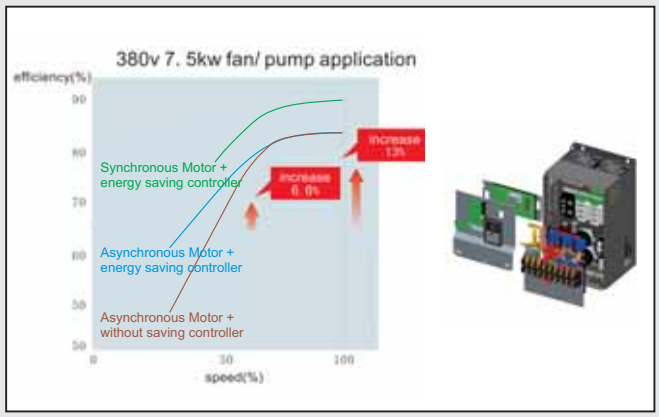

Excitation Braking

The PI500 inverter is capable of fast braking without incorporating a brake module and resistor. By inhibiting the rise of DC voltage in the drive when the motor regenerates during deceleration, the PI500 is able to effectively fast stop the motor without generating DC link over voltage errors. Highly dynamic braking requirements may necessitate the need for brake modules.

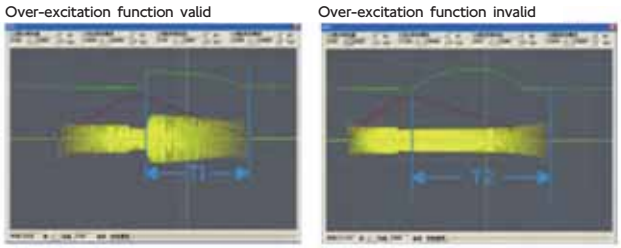

PI500 Inputs & Outputs

- 8 Digital inputs: 51 multi-function selections
- 1 Digital input: High speed pulse input (DI5)
- 2 Digital outputs: 41 Multi-function selections
- 2 Analogue inputs: 0 to 10V or 0 to 20mA
- 1 Analogue input: -10 to +10V
- 2 Analogue outputs: 0 to 10V or 0 to 20mA
- 2 Potential free relays: NO/NC 3A, 250V
- 1 Temperature input: PT100 thermistor
- Built-in Communication: RS485

Serial Communication

Modbus

CANopen

PROFIBUS®

PID Function

Two built in PID function blocks allow the user to control a variety of process applications such as temperature, pressure and flow. Closed loop process control provides accurate control and reaction to variations in processes. The PI500 includes built-in monitoring and trip function of the controller in the event of the feedback signal failing.

PC Software

User friendly PC monitoring software enables seamless tracking and fault finding on your drive system through the software integrated oscilloscope function. The ability to monitor the drive in real time makes it simple to debug and analyse system performance. The online programing functionality creates a convenient alternative to the layered keypad programing option.

Maintenance

Typically the drive cooling fan is the only moving part on the drive system and is generally exposed to most of the contaminants in the installation area, and hence has the highest failure potential. The PI500 cooling fan design incorporates cooling fans that are easily removed either for cleaning or replacement which ensures that the drive can remain in-situ during the maintenance process which reduces excessive handling and wiring of the unit.

1 = fan terminals

2 = fan fastening screws

NAMEPLATE DATA

Inverter model

Output rating

Input rating

Output specifications

Bar code

Serial No.

BMG MOTOLINE CE

MODEL:	PI500 018G3
POWER:	18.5 kW
INPUT:	AC 3PH 380V(-15%)-440V(+10%) 50Hz/60Hz
OUTPUT:	AC 3PH 0V-Vin37A 0-400Hz

ZPAB1A8888888

MODEL DESCRIPTION

PI 500 018 G 3

Motoline inverter

Serial name
PI500 series product

Rated output power
018:18.5KW
132:132KW

Input voltage level
1: single phase 220V
2: three phase 220V
3: three phase 380V
4: three phase 480V
6: three phase 690V

Function code
F: Light load
G: General load

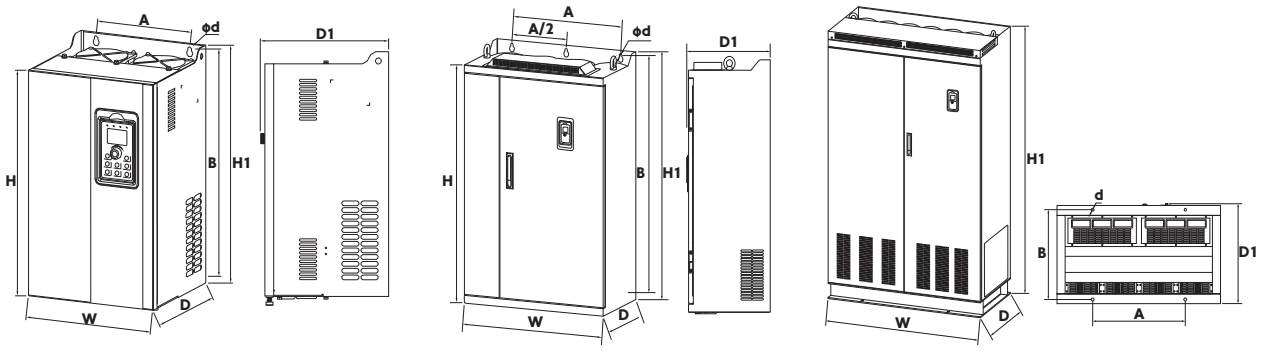

7.5 - 220kW 250 - 400kW 450 - 630kW

INVERTER MODEL	OUTPUT POWER (kW)	INPUT CURRENT (A)	OUTPUT CURRENT (A)	DIMENSION (H1 x W x D1mm)					INSTALLATION (A x Bdmm)			N.W (kg)
				H	H1	W	D	D1	A	B	d	
PI500-5R5G1	5.5	50	25	280	300	190	190	198	140	285	6	7.2
PI500-7R5G1	7.5	74	32	330	350	210	190	198	150	335	6	9.5
PI500-011G1	11	84	45									
PI500-015G1	15	115	60	380	400	240	215	223	180	385	7	13
PI500-018G1	18.5	144	75									
PI500-022G1	22	169	90	500	520	300	275	283	220	500	10	41.2
PI500-030G1	30	220	110									
PI500-037G1	37	276	152									
PI500-045G1	45	325	176	550	575	355	320	328	250	555	10	58
PI500-055G1	55	380	210									
PI500-5R5G2	5.5	28	25	280	300	190	190	198	140	285	6	7.2
PI500-7R5G2	7.5	37.1	32									
PI500-011G2	11	49.8	45	330	350	210	190	198	150	335	6	9.5
PI500-015G2	15	65.4	60	380	400	240	215	223	180	385	7	13
PI500-018G2	18.5	81.6	75									
PI500-022G2	22	97.7	90	500	520	300	275	283	220	500	10	41.2
PI500-030G2	30	122.1	110									
PI500-037G2	37	157.4	152									
PI500-045G2	45	185.3	176	550	575	355	320	328	250	555	10	58
PI500-055G2	55	214	210									
PI500-075G2	75	307	304	695	720	400	360	368	300	700	10	72.5
PI500-093G2	93	383	380	790	820	480	360	368	370	800	11	108
PI500-110G2	110	428	426									
PI500-132G2	132	467	465	940	980	705	380	388	550	945	13	190
PI500-160G2	160	522	520									

After installing the screw rings, the height dimensions is: H1 + 15mm.

TECHNICAL SPECIFICATIONS

INVERTER MODEL	OUTPUT POWER (kW)	INPUT CURRENT (A)	OUTPUT CURRENT (A)	DIMENSION (H1 x W x D1mm)					INSTALLATION (A x Bdmm)			N.W (kg)
				H	H1	W	D	D1	A	B	d	
PI500-7R5G3/011F3	7.5/11	20.5/26	17/25	280	300	190	190	198	140	285	6	7.2
PI500-011G3/015F3	11/15	26/35	25/32									
PI500-015G3/018F3	15/18.5	35/38.5	32/37									
PI500-018G3/022F3	18.5/22	38.5/46.5	37/45	330	350	210	190	198	150	335	6	9.5
PI500-022G3/030F3	22/30	46.5/62	45/60									
PI500-030G3/037F3	30/37	62/76	60/75	380	400	240	215	223	180	385	7	13
PI500-037G3/045F3	37/45	76/91	75/90									
PI500-045G3/055F3	45/55	91/112	90/110	500	520	300	275	283	220	500	10	41.2
PI500-055G3/075F3	55/75	112/157	110/150									
PI500-075G3	75	157	150									
PI500-093F3	93	180	176	550	575	355	320	328	250	555	10	58
PI500-93G3/110F3	93/110	180/214	176/210									
PI500-110G3/132F3	110/132	214/256	210/253									
PI500-132G3/160F3	132/160	256/307	253/304	695	720	400	360	368	300	700	10	72.5
PI500-160G3/187F3	160/187	307/345	304/340	790	820	480	360	368	370	800	11	108
PI500-187G3/200F3	187/200	345/385	340/380									
PI500-200G3/220F3	200/220	385/430	380/426									
PI500-220G3	220	430	426									
PI500-250F3	250	468	465	940	980	705	380	388	550	945	13	190
PI500-250G3/280F3	250/280	468/525	465/520									
PI500-280G3/315F3	280/315	525/590	520/585									
PI500-315G3/355F3	315/355	590/665	585/650									
PI500-355G3/400F3	355/400	665/785	650/725									
PI500-400G3	400	785	725									
PI500-450F3	450	883	820	/	1700	1200	600	612	680	550	17	-
PI500-450G3/500F3	450/500	883/920	820/860									
PI500-500G3/560F3	500/560	920/1010	860/950									
PI500-560G3/630F3	560/630	1010/1160	950/1100									
PI500-630G3/700F3	630/700	1160/1310	1100/1250									

with DC choke

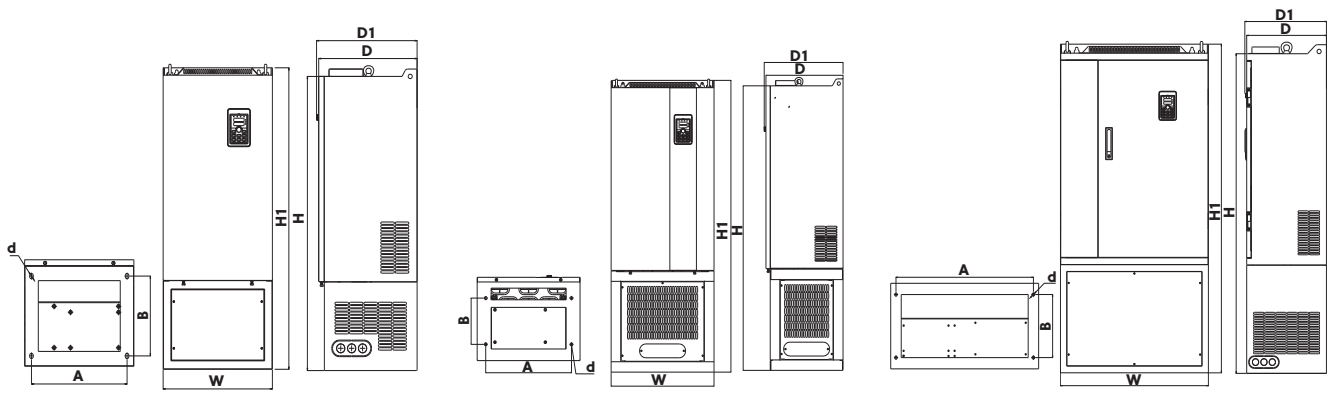

INVERTER MODEL	OUTPUT POWER (kW)	INPUT CURRENT (A)	OUTPUT CURRENT (A)	DIMENSION (H1 x W x D1mm)					INSTALLATION (A x Bdmm)			N.W (kg)
				H	H1	W	D	D1	A	B	d	
PI500-132G3R/160F3R	132/160	256/307	253/304	995	1020	400	360	368	350	270	13*18	114.5
PI500-160G3R/187F3R	160/187	307/345	304/340	1230	1260	480	360	368	400	200	13	153
PI500-187G3R/200F3R	187/200	345/385	340/380									
PI500-200G3R/220F3R	200/220	385/430	380/426									
PI500-200G3R	220	430	426									
PI500-250F3R	250	468	465	1419	1460	705	380	388	620	240	13	249.4
PI500-250G3R/280F3R	250/280	468/525	465/520									
PI500-280G3R/315F3R	280/315	525/590	520/585									
PI500-315G3R/355F3R	315/355	590/665	585/650									
PI500-355G3R/400F3R	355/400	665/785	650/725									
PI500-400G3R	400	785	725									

Remark"PI500 series frequency inverter PI500-132G3R/160F3R to PI500-400G3R, "R" stands for "built-in DC choke, for example PI500-160G3R/187F3R." After installing the screw rings, the height dimensions is: H1 + 15mm.

STANDARD SPECIFICATIONS

ITEM		SPECIFICATION
Power	Voltage and frequency levels	Single phase 220V (-15%), 50/60Hz Three phase 220V (-15%), 50/60Hz Three phase 380V (-15%), 50/60Hz Three phase 480V (-15%), 50/60Hz Three phase 690V (-15%), 50/60Hz
	Allowable fluctuation	Voltage:±10% Frequency:±5%
Control system	Control system	High performance vector control inverter based on DSP
	Control method	V/F control, vector control W/O PG, vector control W/ PG
	Automatic torque boost function	Low frequency (<1Hz) and large output torque control using V/F control mode
	Acceleration/deceleration control	Straight or S-curve mode. Four types available with time range 0.0 to 6500.0s
	V/F curve mode	Linear, square root/m-th power,custom V/F curve
	Overload capability	G type: rated current 150% - 1 minute, rated current 180% - 2 seconds
		F type: rated current 120% - 1 minute, rated current 150% - 2 seconds
	Maximum frequency	Vector control:0 to 300Hz V/F control:0 to 3200Hz
	Carrier Frequency	0.5 to 16kHz; auto adjust of carrier frequency according to load characteristics
	Start torque	G type: 0.5Hz/150% (vector control W/O PG) F type: 0.5Hz/100% (vector control W/O PG)
	Speed range	1:100 (vector control W/O PG) 1:1000 (vector control W/ PG)
	Steady-speed precision	Vector control W/O PG: ≤ ± 0.5% (rated synchronous speed) Vector control W/ PG: ≤ ± 0.02% (rated synchronous speed)
	Torque response	≤ 40ms (vector control W/O PG)
	Torque boost	Automatic torque boost; manual torque boost(0.1% to 30.0%)
	DC braking	DC braking frequency: 0.00Hz to max. frequency, braking time: 0.0 to 36.0 seconds Braking current value: 0.0 to 100.0 seconds
	Jogging control	Jog Frequency Range: 0.00Hz to max. frequency Jog Ac/deceleration time: 0.0s~6500.0s
	Multi-speed operation	16 preset speeds
	Built-in PID	Closed-loop control system for process control
	Automatic voltage regulation(AVR)	Automatically maintain a constant output voltage when the voltage of electricity grid varies
Self-diagnosis	Self-diagnosis of peripherals after power-up	After powering up, unit will perform safety testing, such as ground fault, short circuit, etc.
	Common DC bus function	Multiple inverters can use a common DC bus
	Quick current limiting	The current limiting algorithm is used to reduce the inverters overcurrent
	Timing control	Timing control function: time setting range(0m to 6500m)

STANDARD SPECIFICATIONS

ITEM			SPECIFICATION
Running	Input signal	Start option	Keyboard/terminal/communication
		Reference option	10 frequency settings available, including adjustable DC(0 to 10V),adjustable DC(0 to 20mA), panel potentiometer, etc
		Start signal	Rotate forward/reverse
		Multi-speed	At most 16-speed can be set(run by using the multi-function terminals or program)
		Emergency stop	Interrupt controller output
		Wobbulate run	Process control run
		Fault reset	When the protection function is active, you can automatically or manually reset the fault condition
		PID feedback signal	Including DC(0 to 10V), DC(0 to 20mA)
	Output signal	Running status	Motor status display, stop, ac/deceleration, constant speed, program running status
		Fault output	Contact capacity: normal-closed contact 3A/AC 250V; normal-opened contact 5A/AC 250V; 1A/DC 30V
		Analog output	Two-way analog output, 16 signals can be selected such as frequency, current, voltage and other, output signal range (0 to 10V / 0 to 20mA)
		Output signal	At most 4-way output,there are 40 signals each way
	Run function		Limit frequency,jump frequency, frequency compensation,auto-tuning, PID control
	DC current braking		Built-in PID regulates braking current to ensure sufficient braking torque under no overcurrent condition
	Running command channel		Three channels: operation panel,control terminals and serial communication port. They can be switched through a variety of ways
	Frequency source		Total 10 frequency sources: digital, analog voltage, analog current, multi-speed and serial port They can be switched through a variety of ways
	Input terminals		8 digital input terminals, compatible with active PNP or NPN input mode, one of them can be for high-speed pulse input(0 to 100kHz square wave); 3 analog input terminals for voltage or current input
	Output terminals		2 digital output terminals, one of them can be for high-speed pulse output(0 to 100kHz square wave); one relay output terminal; 2 analog output terminals respectively for optional range (0 to 20mA or 0 to 10V),they can be used to set frequency, output frequency, speed and other physical parameters
Protection function	Inverter protection		Overvoltage protection, undervoltage protection, overcurrent protection, overload protection, overheat protection, overcurrent stall protection, overvoltage stall protection, losting-phase protection (optional), external fault, communication error, PID feedback signal abnormalities, PG failure and short circuit to ground protection
	IGBT temperature display		Displays current temperature IGBT
	Inverter fan control		Can be set
	Instantaneous power-down restart		Less than 15 milliseconds: continuous operation. More than 15 milliseconds: automatic detection of motor speed, instantaneous power-down restart
	Speed start tracking method		The inverter automatically tracks motor speed after it starts
	Parameter protection function		Protect inverter parameters by setting administrator Password and decoding
Display	LED/OLED display keyboard	Running information Error message	Monitoring objects including : running frequency, set frequency, actual motor current, DC bus voltage, output voltage, actual motor speed, cumulative running time, IGBT temperature, PID reference value, PID feedback value, input terminal status, output terminal status, analog AI1 value, analog AI2 value, current stage of multi-speed, torque set value
			At most save 3 error messages, and the time, type, voltage, current, frequency and work status can be queried when the failure occurs.
	LED display		Display parameters
	OLED display		Optional, prompts operation content in Chinese/English text.
	Parameters copy		Upload or download function code information of frequency inverters, do the parameter copy quickly.
	Key lock and function selection		Lock part or all of keys, define the function scope of some keys to prevent misuse.
Communication	RS485		The optional completely isolated RS485 communication module can communicate with the host computer.
Environment	Environment temperature		-10°C to 40°C (temperature at 40°C to 50°C, please derate for use)
	Storage temperature		-20°C to 65°C
	Environment humidity		Does not exceed 90% R.H, no condensation of moisture
	Vibration		Below 5.9m/s² (= 0.6g)
	Application sites		Indoors where there is no sunlight or corrosion, explosive gas and water vapor, dust, flammable gas, oil mist, water vapor, drip or salt, etc.
	Altitude		Below 1000m
	Pollution degree		2
Product standard	Product adopts safety standards.		IEC61800-5-1:2007
	Product adopts EMC standards.		IEC61800-3:2005
	Cooling method		Forced air cooling and natural air cooling

OPERATING KEYBOARD

SIGN	NAME	FUNCTION
PRG	Parameter Setting / Exit Key	Enter menu parameter change status Exit from function change Return to status display menu from sub-menu or function menu
SHIFT	Shift Key	Selection of parameter variable.
▲	Ascending Key	Navigation in menu.
▼	Descending Key	Navigation in menu.
RUN	Run Key	Used for running motor in local control mode.
STOP RESET	Stop / Reset Key	Stops motor operation and resets fault conditions.
ENTER	Enter Key	Enter into levels of menu screen, confirm settings.
QUICK	Quick multifunction key	This key function is determined by the function code F6.21.
	Keyboard potentiometer	Keyboard potentiometer for speed reference.

Installation Position and Space

PI500 series inverter according to different power rating, the requirements for around installation and reserved space is different, specifically as shown on the right:

PI500 Series frequency inverter heat radiator circulated from bottom to top, when more than one inverter work together, usually mounted side by side. In the case of installing inverters, one above the other, the heat generation of the lower inverter could cause failure of the above inverter, therefore heat insulation reflectors or heat channeling would be needed or required.

MOUNTED VERTICALLY	DIMENSION REQUIREMENT
5.5 - 22KW	A ≥ 200MM: B ≥ 10MM
30 - 75KW	A ≥ 200MM: B ≥ 50MM
93 - 400KW	A ≥ 300MM: B ≥ 50MM

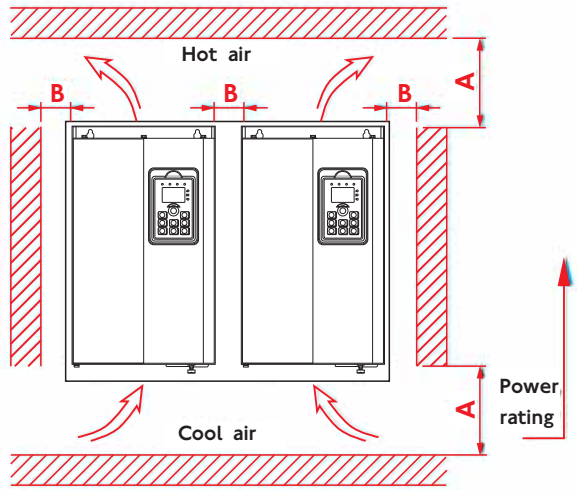

Environment

- Environmental temperature: -10°C to 50°C. Above 40°C, the capacity will decrease 3% by each 1°C. It is not advised to use the inverter above 50°C.
- Prevent electromagnetic interference, and away from interference sources.
- Prevent ingress of droplets, vapour, dust, dirt, lint and metal fine powder.
- Prevent the ingress of oil, salt and corrosive gases.
- Avoid vibration, max. amplitude is less than 5.9m/s (0.6g).
- Avoid high temperature and humidity or exposure to rain. Humidity shall be less than 90% RH *(non condensing). In the presence of corrosive gas, maximum relative humidity is no more than 60%.
- Altitude below 1000 meters.
- Never use in the dangerous environment of flammable, combustible, explosive gas, liquid or solid.

Wiring

Frequency inverter wiring is divided by main circuit and control circuit. Users must properly connect frequency inverter in accordance with the wiring connection diagram shown on the next page.

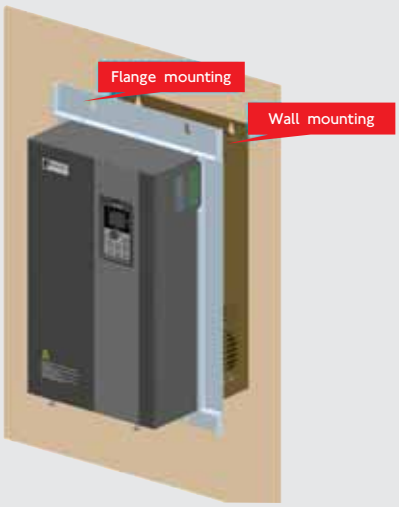

WIRING DIAGRAM

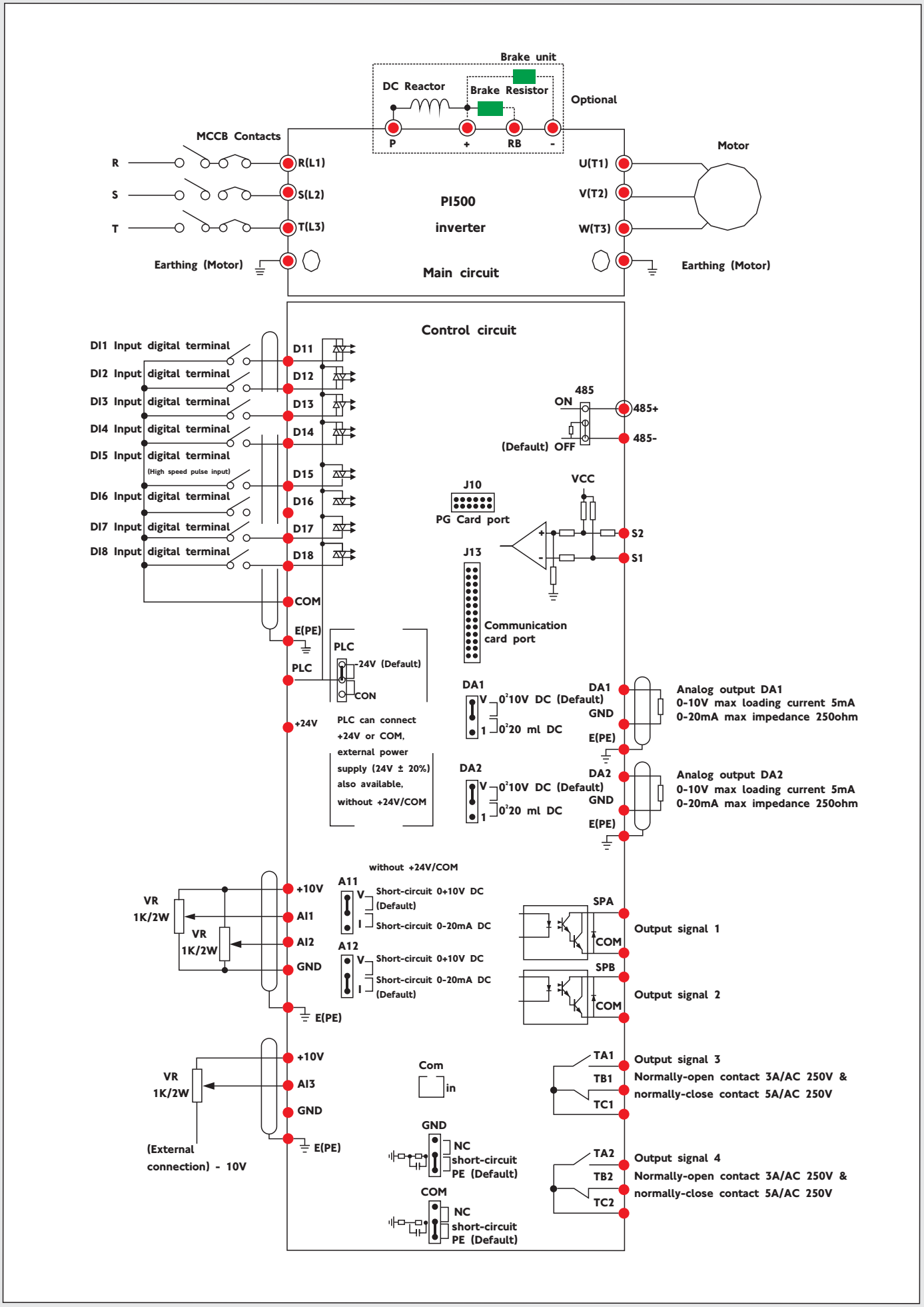

Various expansion cards:

- Encoder option
- Water pump controller
- PLC function card

Braking unit and braking resistor: For regenerative applications

AC input reactor & DC reactor for reduction of harmonic distortion.

AC input reactor

DC reactor

Output reactor for long motor cables and Du/Dt reduction.

AC output reactor

EMI filters to reduce FRI noise.

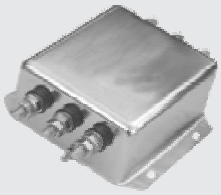

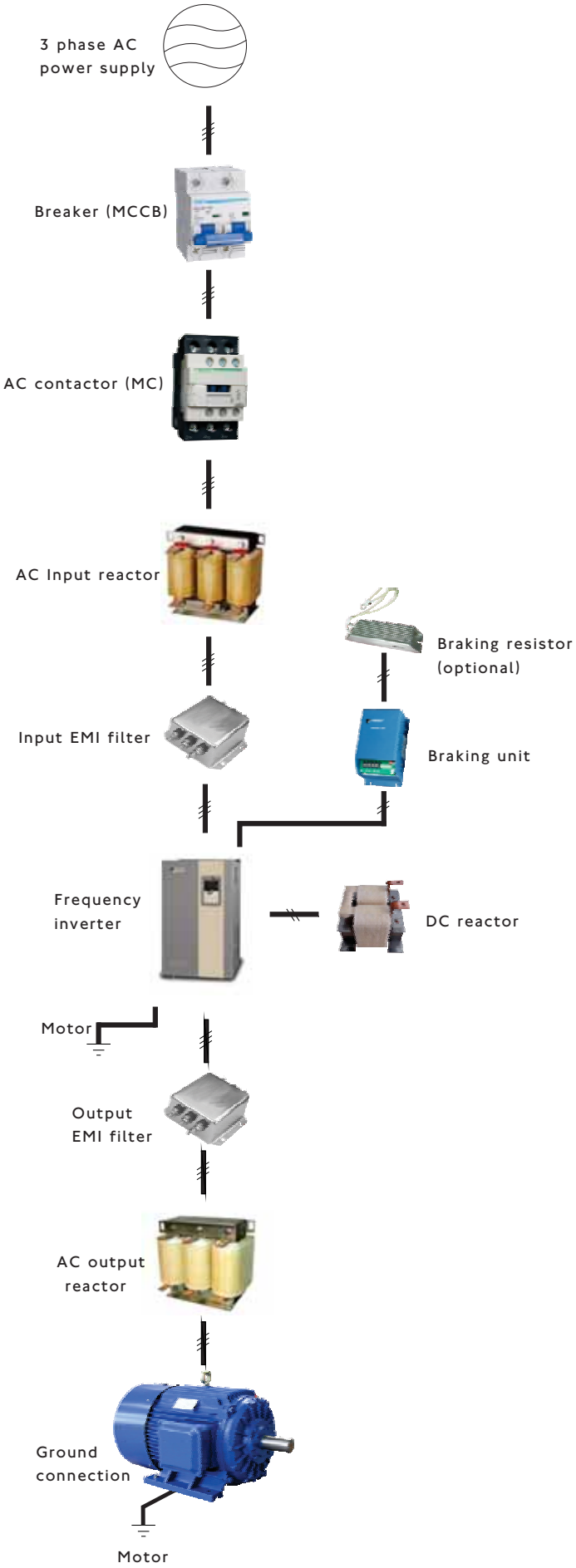

PERIPHERAL EQUIPMENT

Machine Tool Industry

Electro-spindle, vertical lathe spindle, surface grinder spindle, boring machine spindle, sawing machine.

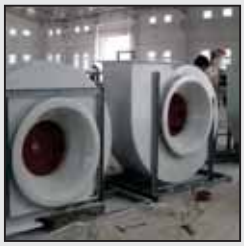

Injection Moulding Machine

Extruding machine, injection machine, disc refiner, internal mixer, granulate machine.

Pump

Petroleum pump, metallurgical pump, chemical pump, fishing pump, mining pump, power pump, water conservancy pump, sewage pump, food pump, brewing pump, pharmacy pump, beverage pump, fuel pump, condiment pump, paper pump, textile pump, printing and dyeing pump, ceramic pump, paint conveyor pump, agricultural chemical pump, fertiliser pump, sugar-syrup pump, methanol pump, spray pump, salt pump, beer pump, starch pump, feed pump.

Winding Machine

Lithium battery winding machine, capacitor core winding machine, textile winding machine.

Conveyor Belt

Belt-type conveyor, plate conveyor, car type conveyor, escalator, passenger conveyor, scraper conveyor, embedded scraper conveyor, bucket conveyor, bucket elevator conveyor, underslung conveyor.

Heating System

Constant pressure water supply, system for boiler, mill exhauster, belt conveyor for coal, coal breaker, air blower, induced draft fan, cold rolling mill.

Compressor

Piston compressor, screw compressor, centrifugal compressor, linear compressor.

Photovoltaic

Microwave relay station, optical cable communication system, wireless paging station, satellite communication and satellite television receiving system. Computerised telephone system in countryside, communication system in troops, railway and highway signalling system, lighthouse and beacon light, meteorological station and seismic station.

Fan Industry

Centrifugal compressor, axial-flow compressor centrifugal blower, roots blower centrifugal fan, axial flow fan.

Coal Mining Industry

Engine analyser, slag pot carrier, feeding machine iron ladle motor, fireproof door motor ore washing pump, suction fan in the pit, air supply system, hauling machine.

Hoisting Industry

Mine hoist, mining electric locomotive port hoist, builders' lift, pile driver, large crane motor, tower crane lifting.

Petroleum Industry

Plunger pump, beam pumping unit, oil transfer pump, gas transmission pipeline system compressor.

Chemical Industry

Vacuum kneader (agitator), dryer film blowing machine, plastic mill, pulveriser drafting device for short fibre, high speed spinning machine for chemical fibre feedstock pump for oil refinery pump for coking unit.

Iron And Steel Industry

Winding engine for iron-smelting blast furnace, dust removing blower for blast furnace gas blanketing blowing engine, roots blower for digital thermometer, variable frequency exhaust fan for steel furnace roasting and purifying fan, hot rolling machine, cold tandem rolling mill, feeding system, mill exhauster, vibrating sieving machine, wire drawing machine, winding machine, blender mixer, drying machine, slime pump, draining pump, water supply pump, unbender, pipemaking machine, ladle crane motor.

Power Industry

Boiler blower, induced draft fan, boiler feeding pump, circulating water pump, low pressure drain pump, condensate pump, cooling water pump, mortar pump, coal feeder.

Textile Industry

Spinning machine, fagoting machine, pounding machine, knitting machine, centrifugal dehydrator, spinning frame, aeraton machine for print works, tentering and thermofixing machine, decorating machine, bleaching machine, dyeing jiggers.

NOTES

BRINGING THE WORLD'S BEST BRANDS TO YOU

In the bid to procure cutting-edge components at competitive prices, BMG is able to capitalise on long-standing relationships with leading manufacturers dedicated to excellence in design and production.

Products are imported from around the globe and brought to BMG's strategically located distribution facilities and regional service centres via the main distribution hub in Johannesburg - BMG World. A world-class facility boasting 308 000m^3 of fully stocked warehouse space, an accredited training facility and unlimited engineering capabilities.

Preferred Brands:

Our Extensive Coverage Throughout Africa

105
BRANCHES

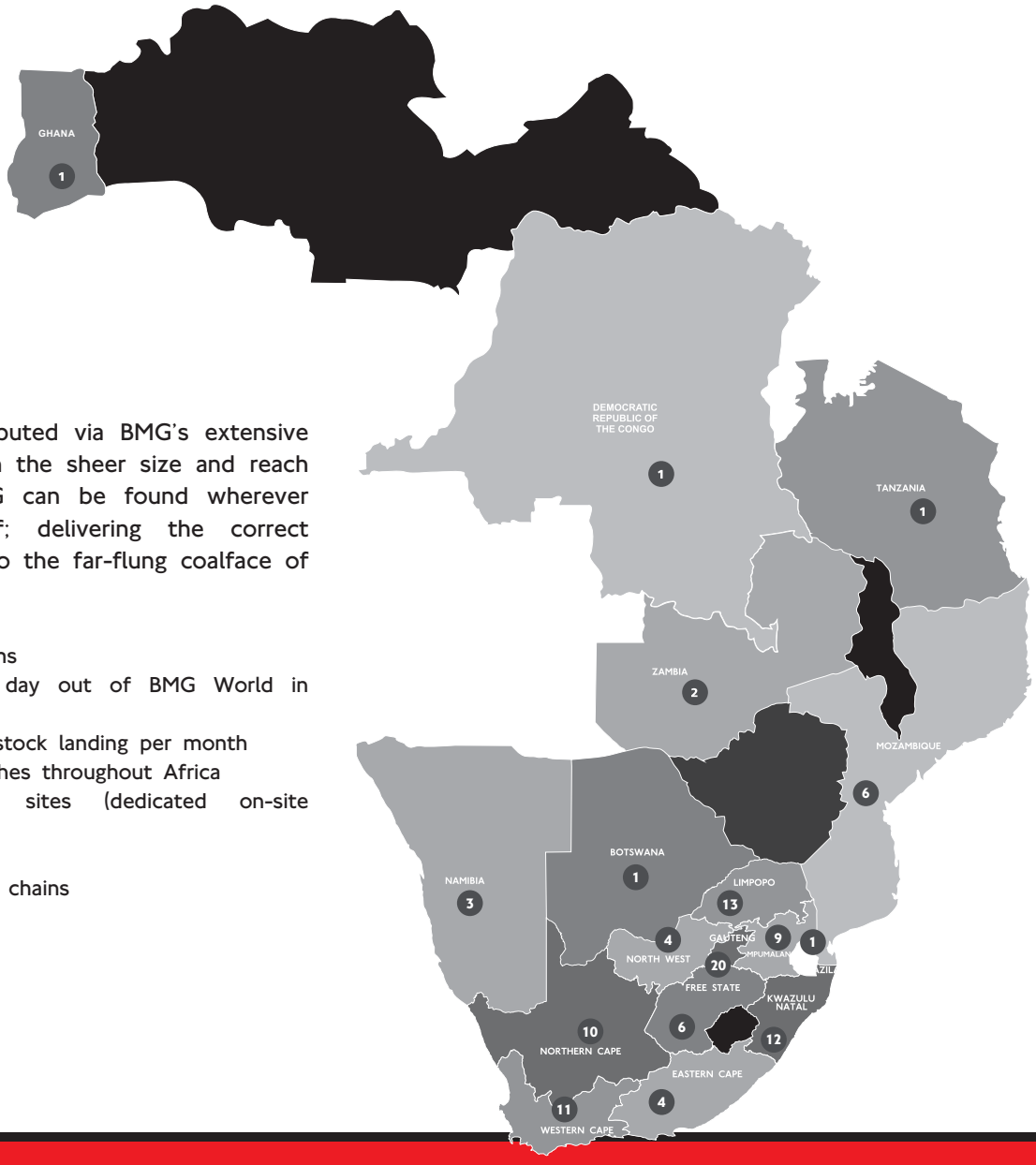

Products and services are distributed via BMG's extensive distribution network. It's through the sheer size and reach of our infrastructure, that BMG can be found wherever industry has established itself; delivering the correct components at the right time, to the far-flung coalface of our customers' operations.

- Over 300 000 product line items
- Around 4 500 transfers per day out of BMG World in Johannesburg
- Over 1 000 tons of imported stock landing per month
- 105 strategically situated branches throughout Africa
- Vendor Managed Inventory sites (dedicated on-site stockholding)
- International exports
- Locally empowered distribution chains

Be PART

24 HR TOLL-FREE EMERGENCY
BRANCH HELPLINE:

0800 022 224

WEBSITE:

www.bmgworld.net

BMG

An Invicta Holdings Group Company

BEARINGS • SEALS • POWER TRANSMISSION • DRIVES & MOTORS
MATERIALS HANDLING • FASTENERS & TOOLS • HYDRAULICS
PNEUMATICS • FILTRATION • LUBRICATION • VALVES
TECHNICAL RESOURCES • FIELD SERVICES

BEE4
EMPOWERING SUPPLIER

ISO 9001	Certified
ISO 14001	Certified
ISO 45001	Certified

BMG-DRI05102017 - PI500